these particular positions. Stress design work and design oriented consulting output in lieu of conventional publications when making pay, promotion and tenure decisions concerning these individuals.

CONCLUSIONS

1) The beneficial trend of the past two decades toward up-grading analytical aspects of engineering education has unfortunately been accompanied by a concomitant deterioration in the quality of instruction offered in engineering synthesis and design.
2) The individual teacher can do much to rectify this imbalance simply by modifying the conduct of existing courses. Questions of synthesis and design can be introduced in nearly every course at every level. What is mainly needed is a shift in viewpoint, and the allocation of sufficient time and effort toward fostering creativity in design.
3) School administrators can play a decisive role in restoring a healthier balance in engineering education by adopting policies of faculty recruitment, pay, promotion, and tenure that foster and reward creative design skills to a degree comparable to that now lavished on research and publications.

A Simplified Method of Feedback Amplifier Analysis

SOLOMON ROSENSTARK, MEMBER, IEEE

Abstract—**An exact asymptotic method is presented for performing gain calculations on feedback amplifiers. The method is algorithmic and utilizes only Ohm's law, voltage and current division and source conversion and does not require the breaking of the feedback loop. For impedance calculations Blackman's formula is used. A set of quick-reference tables is presented for the most common feedback amplifier configurations.**

1. INTRODUCTION

A COMMON approach used in the teaching of feedback amplifiers to undergraduates consists of presenting the fundamental principles on a block diagram basis. This is very suitable for demonstrating the general effects of feedback, such as improvement in gain stability, distortion, and changes in bandwidth. But the block diagram method is of limited usefulness in practical feedback amplifier circuits, since the feedback network causes significant loading on the basic amplifier and so it is impossible to separate the feedback amplifier into two distinct blocks. A number of different methods have been used to circumvent the problem.

The traditional method [1] requires the breaking of the feedback loop at some point and carefully terminating with the proper impedance at the break. This often gives rise to conceptual problems which are difficult to resolve. For example, how can this procedure be applied to a very simple feedback amplifier such as the emitter follower? A more recent method [2] overcomes some of the above difficulties by placing a phantom voltage (or current) source at the break, but the method is approximate inasmuch as forward transmission through the feedback network is ignored.

Another approach is to represent the amplifier and feedback network in terms of their respective two port matrices [3]. The student is required to choose a Y, Z, H, or G matrix representation depending on the categorization of the amplifier on the basis of the input-output feedback connection (shunt-shunt, series-series etc.). This method is complicated and so approximations to this method are often used.

Finally, there is the problem of finding input and output impedances. The usual method is to multiply or divide the open loop impedance by the return difference depending on the amplifier categorization. This makes no provision for finding impedance for cases not falling into the four basic classifications, for example amplifiers with unbalanced bridge feedback.

This paper presents the asymptotic formula for gain calculations in sections 2 and 3. A simple derivation is given in appendix A. The asymptotic gain method has the following advantages:

a. It is exact.

b. It is algorithmic. No ingenuity is required to apply the method.

c. It is simple. Ohm's law, voltage and current division, and source conversion suffice to find all feedback quantities.

d. It is general. The subject of breaking the loop never really comes up.

For impedance calculation Blackman's impedance rela-

Manuscript received January 9, 1974.
The author is with the Department of Electrical Engineering, Newark College of Engineering, Newark, N. J. 07102.

tion is reviewed in section 4, and a simple derivation is given in appendix B. This formula is very general and can be used in all situations including unbalanced bridge feedback.

In appendix C a set of quick-reference tables is presented for the most common feedback amplifier configurations.

2. ASYMPTOTIC GAIN FORMULA

Rather than use the customary A and β approach we shall here analyze amplifiers by using the asymptotic gain formula (which is derived in appendix A)

$$G_f = K\frac{T}{1+T} + \frac{G_o}{1+T} \tag{1}$$

where

$$G_f \equiv \text{Feedback Amplifier Gain} \tag{2}$$

$$G_o = G_f\,|_{T=0} \equiv \text{Direct Transmission Term} \tag{3}$$

$$K = G_f\,|_{T\to\infty} \equiv \text{Asymptotic Gain} \tag{4}$$

$$T \equiv \text{Return Ratio.} \tag{5}$$

All the quantities which enter equation 1 must be calculated with respect to one and only one controlled source within the feedback amplifier. We shall refer to the controlled source quantity x_b related to the controlling quantity x_a by the parameter k as follows:

$$x_b = kx_a. \tag{6}$$

2.1 Calculation of the Return Ratio T

The return ratio T is determined by replacing the dependent source kx_a by an independent source of value k, setting all independent sources to zero, and computing the value of the variable x_a in the resulting system; the return ratio T is equal to $-x_a$.

2.2 Calculation of the Asymptotic Gain K

To find K we let the return ratio $T \to \infty$. This is the same as letting $k \to \infty$. In appendix A it is shown that the controlling quantity x_a goes to zero. The amplifier gain calculated with this condition imposed is K. It may be remarked at this point that inspection of equation 1 shows that for (loop gain) $T \gg 1$, K will approximately equal the final gain G_f of the feedback amplifier.

2.3 Calculation of the Direct Transmission Term G_o

We simply set T to zero by setting k equal to zero. For many amplifiers $G_o \ll KT$ and so contributes very little to the gain G_f. In those situations it can be ignored and need not be calculated.

3. APPLICATION OF THE ASYMPTOTIC METHOD

The use of the asymptotic gain formula will now be illustrated through some examples.

Example 1: Consider the series-shunt feedback pair in figure 1 and its simplified equivalent circuit in figure 2.

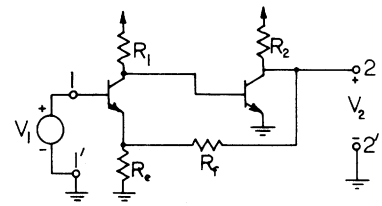

Figure 1. Series-shunt feedback pair.

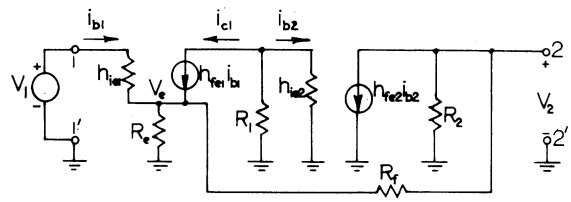

Figure 2. Simplified equivalent circuit for the series-shunt feedback pair.

(The term series-shunt is used for identification and not for classification.)

We shall arbitrarily select the controlled source of the second transistor to calculate all the desired quantities. Using the method of section 2.1 we draw the equivalent circuit of figure 3 for calculating the return ratio T. We proceed to calculate i_{b2} by inspection, and then the negative of i_{b2} is T. We find in a very straightforward manner

$$T = h_{fe2}\frac{R_2}{R_2 + R_f + (R_e \,||\, h_{ib1})}\cdot\frac{R_e}{R_e + h_{ib1}}\cdot\frac{\alpha_1 R_1}{R_1 + h_{ie2}}. \tag{7}$$

To find the asymptotic gain K we return to figure 2 and impose the condition $h_{fe2} \to \infty$. This causes $i_{b2} \to 0$ and in turn $i_{c1} \to 0$, hence $i_{b1} \to 0$ (since h_{fe1} remains finite). Accordingly $V_e = V_1$ and then the relevant part of the circuit is shown in figure 4. We see by inspection that

$$V_1 = V_2\frac{R_e}{R_e + R_f}$$

hence the ratio V_2/V_1 corresponding to K is

$$K = \frac{R_e + R_f}{R_e} \tag{8}$$

and this is approximately equal to the final gain of the feedback amplifier if $T \gg 1$. A gain specification can be used to determine the ratio R_f/R_e.

Although G_o is usually not of interest as mentioned in section 2.3 (this is particularly true for this example where $KT \gg G_o$) we shall illustrate the method of calculation for situations where it might be of interest. In figure 2 we set $h_{fe2} = 0$ and refer the resultant circuit to the emitter of the first transistor. Voltages are unchanged by this transformation and we get the diagram shown in figure 5.

The ratio V_2/V_1 which equals G_o is determined by inspection, with the result

$$G_o = \frac{R_2}{R_2 + R_f + (R_e \,||\, h_{ib1})}\cdot\frac{R_e}{h_{ib1} + R_e}. \tag{9}$$

We can at this point calculate the quantity KT/G_o by

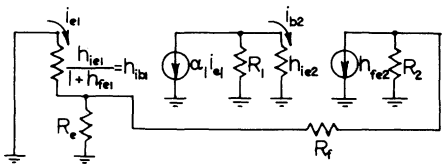

Figure 3. Circuit for calculating the return ratio T.

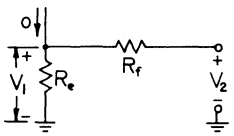

Figure 4. Circuit for calculating the asymptotic gain K.

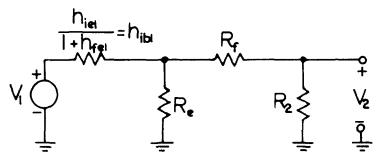

Figure 5. Circuit for calculating the direct transmission term G_o.

using the results of equations 7, 8 and 9, to obtain

$$\frac{KT}{G_o} = \alpha_1 h_{fe2} \frac{R_1}{R_1 + h_{ie2}} \cdot \frac{R_e + R_f}{R_e} \tag{10}$$

and this can be used to ascertain the relative contribution of G_o to G_f.

The problem is solved since the approximate final amplifier gain G_f is known and the amount of feedback T is also known. If a very accurate answer is desired then substitution into equation 1 can be carried out. We see that at no time was it necessary to classify the circuit as to the type of feedback being used, and also the question of breaking the loop never came up. Furthermore, the methods of analysis required were merely voltage division, current division and source conversion.

Example 2: It is an accepted fact that the emitter follower of figure 6a possesses feedback, but it is a difficult circuit to analyze by the A, β approach, since there is no logical way of removing feedback by breaking the loop. This circuit can be readily analyzed by ordinary methods, but a feedback technique that is general should be able to stand the test of being applied to degenerate circuits. We will therefore proceed to test the asymptotic formula on the emitter follower equivalent circuit shown in figure 6b.

Applying the rules of sections 2.1, 2.2, and 2.3 we obtain directly

$$T = h_{fe} \frac{R_e}{h_{ie} + R_e} \tag{11}$$

$$K = 1 \tag{12}$$

$$G_o = \frac{R_e}{h_{ie} + R_e}. \tag{13}$$

Equation 12 states the familiar result for the emitter follower

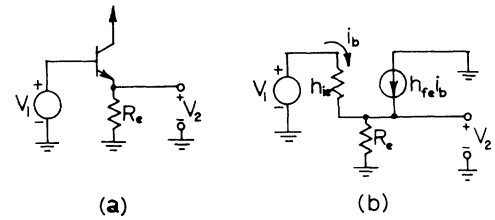

Figure 6. The emitter follower (a) and equivalent circuit (b).

$$G_f \approx 1.$$

When equations 12, 13 and 14 are combined in equation 1, we obtain (to no one's surprise)

$$G_f = \frac{(1 + h_{fe})R_e}{h_{ie} + (1 + h_{fe})R_e}. \tag{14}$$

4. FINDING IMPEDANCES

It has been 30 years since R. B. Blackman presented his method for finding impedances in feedback amplifiers. Although the method is very simple, it is largely ignored in favor of techniques which require that the amplifier be classified into one of four recognized configurations before proceeding. The classification is used to determine whether $1 + T$ should multiply or divide the open-loop impedance. Blackman's impedance relation allows determination of impedances in an unequivocal manner, without the need to break the feedback loop and without the need to categorize the amplifier.

Blackman's method of finding impedance in a feedback amplifier is embodied in the very simple relation

$$Z_{ab} = Z_{ab}^{o} \frac{1 + T_{sc}}{1 + T_{oc}} \tag{15}$$

where

$Z_{ab} \equiv$ Impedance at terminals $a - b$ with feedback amplifier normal. (16)

$Z_{ab}^{o} \equiv$ Impedance at terminals $a - b$ with controlled source $x_b = kx_a$ set to zero. (17)

$T_{sc} \equiv$ Return ratio for source x_b computed with terminals $a - b$ short-circuited. (18)

$T_{oc} \equiv$ Return ratio for source x_b computed with terminals $a - b$ open-circuited. (19)

In many cases either T_{oc} or T_{sc} will be zero, and the non-zero return ratio will correspond to the return ratio computed when obtaining the amplifier gain, hence the only new quantity that is required is Z_{ab}^{o}.

Example 3: For the series-shunt feedback pair of figures 1 and 2 find the input impedance $Z_{11'}$ and the output impedance $Z_{22'}$. We set $h_{fe2} = 0$ and then find by inspection that

$$Z_{11'}^{o} = h_{ie1} + (1 + h_{fe1})[R_e \,||\, (R_f + R_2)] \tag{20}$$

$$Z_{22'}^{o} = R_2 \,||\, [R_f + R_e \,||\, h_{ib1}]. \tag{21}$$

(Note: The output impedance is by convention found with the input source set to zero.)

We now turn our attention to finding the various return ratios.

When terminals $1 - 1'$ are open-circuited then $i_{b1} = 0$, hence

$$T_{11'oc} = 0. \tag{22}$$

When terminals $1 - 1'$ are short-circuited the circuit is the same as in figure 3, hence

$$T_{11'sc} = T(\text{of eq. } 7). \tag{23}$$

By similar observations we find

$$T_{22'oc} = T(\text{of eq. } 7) \tag{24}$$

and

$$T_{22'sc} = 0. \tag{25}$$

We thus find by substitution into equation 15 that

$$Z_{11'} = Z_{11'}{}^{o}[1 + T(\text{of eq. } 7)] \tag{26}$$

and

$$Z_{22'} = \frac{Z_{22'}{}^{o}}{1 + T(\text{of eq. } 7)} \tag{27}$$

and the solution was obtained without prior knowledge as to whether $1 + T$ belongs in the numerator or denominator.

For bridge feedback T_{oc} and T_{sc} are both non-zero, and the impedance calculations cannot be performed by traditional methods. In that case Blackman's method has a clear advantage.

5. CONCLUSION

Use of the asymptotic gain method and Blackman's impedance relation has led to greater student confidence in being able to evaluate amplifier parameters irrespective of the feedback connection. Students are particularly gratified to find that the results obtained by these methods are in complete agreement with those obtained by mesh or nodal analysis.

In addition the method used is directly applicable to operational amplifiers, so that subject need not be covered separately.

APPENDIX A

DERIVATION OF THE ASYMPTOTIC GAIN FORMULA

We draw the feedback amplifier as shown in figure A1 and display the controlled source x_b which is contained inside the amplifier.

We shall consider V_1 and x_b as sources and V_2 and x_a as outputs. Accordingly we write

$$V_2 = AV_1 + Bx_b \tag{A-1}$$

$$x_a = CV_1 + Dx_b. \tag{A-2}$$

In addition we have for the controlled source

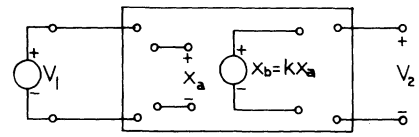

Figure A1. Circuit for deriving the asymptotic gain formula.

$$x_b = kx_a. \tag{A-3}$$

Solving for V_2/V_1 we obtain after some manipulation

$$G_f = V_2/V_1 = \frac{(A - BC/D)(-kD) + A}{1 - kD}. \tag{A-4}$$

We now need an interpretation of terms for the above equation.

If the source V_1 is set to zero and x_b is replaced by k, then we find for x_a from equation A-2

$$x_a = kD.$$

But the above conditions correspond to those found in section 2.1, hence x_a found above is the negative of the return ratio. Accordingly

$$-kD = T \equiv \text{Return Ratio}. \tag{A-5}$$

From equation A-4

$$A - \frac{BC}{D} = G_f\,|_{k\to\infty} = G_f\,|_{T\to\infty}.$$

These conditions correspond to those found in section 2.2, hence

$$A - \frac{BC}{D} = K \equiv \text{Asymptotic Gain}. \tag{A-6}$$

Again from equation A-4

$$A = G_f\,|_{k=0} = G_f\,|_{T=0}.$$

The above conditions correspond to those found in section 2.3, hence

$$A = G_o \equiv \text{Direct Transmission Term}. \tag{A-7}$$

Using equations A-5, A-6, and A-7 in equation A-4 we obtain the asymptotic gain formula

$$G_f = K\frac{T}{1 + T} + \frac{G_o}{1 + T}. \tag{A-8}$$

We shall now establish the condition that is imposed on the feedback amplifier when $k \to \infty$ which is equivalent to $T \to \infty$ as can be seen from equation A-5. Eliminating x_b from equations A-2 and A-3 we obtain

$$x_a = \frac{C}{1 - kD}V_1. \tag{A-9}$$

From this we conclude that for finite V_1

$$\lim_{k\to\infty} x_a = \lim_{T\to\infty} x_a = 0. \tag{A-10}$$

APPENDIX B

A SIMPLE DERIVATION OF BLACKMAN'S RELATION

As in appendix A we draw the circuit in figure B1 and treat I and x_b as sources, and V and x_a as outputs.

$$V = AI + Bx_b \tag{B-1}$$

$$x_a = CI + Dx_b. \tag{B-2}$$

Also

$$x_b = kx_a. \tag{B-3}$$

Solving for V/I, we obtain the impedance at terminals $a - b$ after some rearranging

$$Z_{ab} = A\,\frac{1 - k(AD - BC)/A}{1 - kD}. \tag{B-4}$$

We now need an interpretation of terms for the above equation.

From equation B-1 we have

$$A = \left.\frac{V}{I}\right|_{x_b=0}.$$

The above corresponds to the definition in equation 17, hence

$$A = Z_{ab}{}^{o}. \tag{B-5}$$

If $V = 0$ and $x_b = k$, then equations B-1 and B-2 give the result for x_a:

$$x_a = k(AD - BC)/A.$$

But the above conditions correspond to those found in equation 18, hence

$$-k(AD - BC)/A = T_{sc}. \tag{B-6}$$

If $I = 0$ and $x_b = k$, then from equation B-2

$$x_a = kD.$$

The above conditions correspond to those found in equation 19, hence

$$-kD = T_{oc}. \tag{B-7}$$

Substituting equations B-5, B-6, and B-7 into equation B-4 we obtain

$$Z_{ab} = Z_{ab}{}^{o}\,\frac{1 + T_{sc}}{1 + T_{oc}} \tag{B-8}$$

which is Blackman's impedance relation.

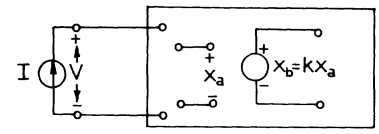

Figure B1. Circuit for deriving Blackman's impedance formula.

APPENDIX C

A TABLE OF SOME COMMON CIRCUITS

In this section a table of common feedback amplifier configurations is presented for quick reference (Figures C1–C8). Although the tables are self-explanatory, some comments are in order.

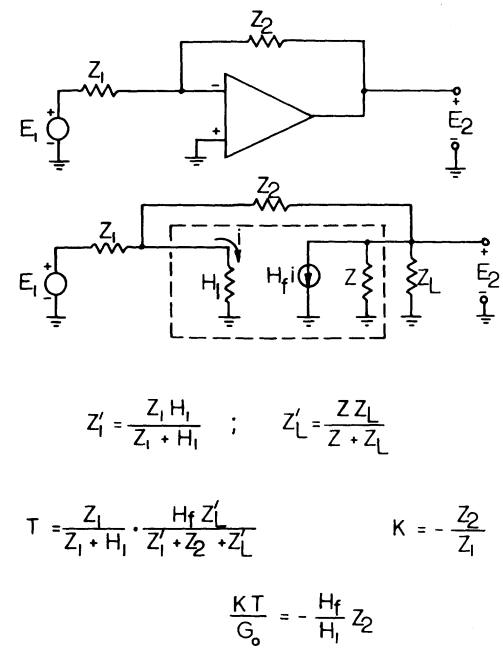

Figure C1. Shunt-shunt amplifier.

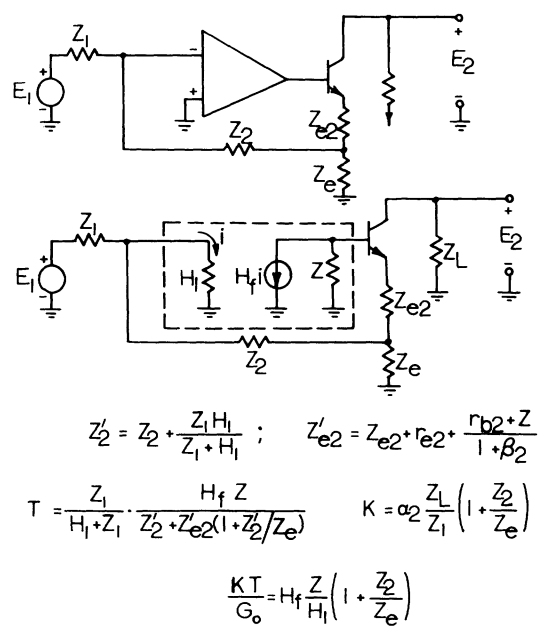

Figure C2. Shunt-series BJT amplifier.

To use the tables, a portion of the amplifier has to be replaced by an unilateral equivalent circuit. For example, in the series-shunt feedback case of figure C3, the amplifier denoted by the triangle and the collector resistor of the first transistor must be replaced by a hybrid model as shown in the second diagram. The quantities T, K, and G_0 were found with respect to the only controlled source depicted in the second diagram.

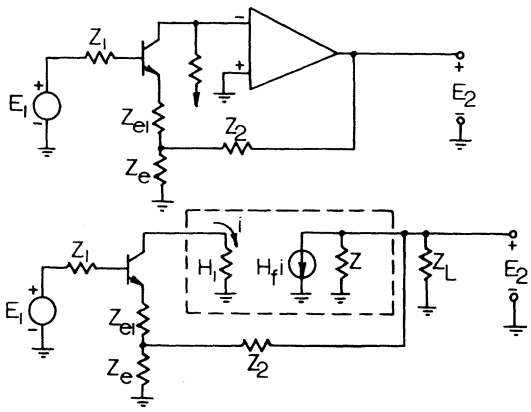

$$Z'_{e1} = Z_{e1} + r_{e1} + \frac{r_{b1} + Z_1}{1 + \beta_1} \; ; \qquad Z'_L = \frac{Z Z_L}{Z + Z_L}$$

$$T = \frac{\alpha_1 H_f Z'_L}{Z_2 + Z'_L + Z'_{e1}\left(1 + \frac{Z_2 + Z'_L}{Z_e}\right)} \qquad K = 1 + \frac{Z_2}{Z_e}$$

$$\frac{KT}{G_o} = \alpha_1 H_f \left(1 + \frac{Z_2}{Z_e}\right)$$

Figure C3. Series-shunt BJT amplifier.

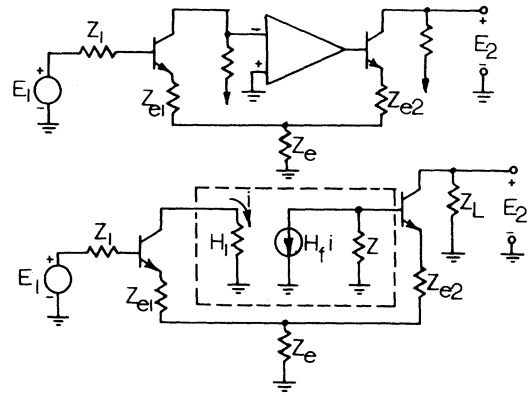

$$Z'_{e1} = Z_{e1} + r_{e1} + \frac{r_{b1} + Z_1}{1 + \beta_1} \; ; \quad Z'_{e2} = Z_{e2} + r_{e2} + \frac{r_{b2} + Z}{1 + \beta_2}$$

$$T = \frac{\alpha_1 H_f Z}{Z'_{e1} + Z'_{e2}\left(1 + Z'_{e1}/Z_e\right)} \qquad K = -\alpha_2 \frac{Z_L}{Z_e}$$

$$\frac{KT}{G_o} = -\alpha_1 H_f \frac{Z}{Z_e}$$

Figure C4. Series-series BJT amplifier.

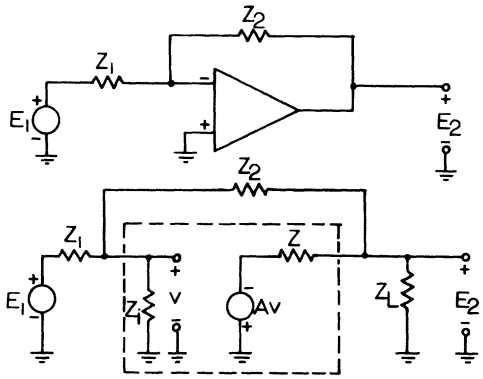

$$Z'_1 = \frac{Z_1 Z_i}{Z_1 + Z_i} \qquad Z'_L = \frac{Z Z_L}{Z + Z_L}$$

$$T = \frac{Z_L}{Z + Z_L} \cdot \frac{A Z'_1}{Z'_1 + Z_2 + Z'_L} \qquad K = -\frac{Z_2}{Z_1}$$

$$\frac{KT}{G_o} = -A \frac{Z_2}{Z}$$

Figure C5. Shunt-shunt amplifier.

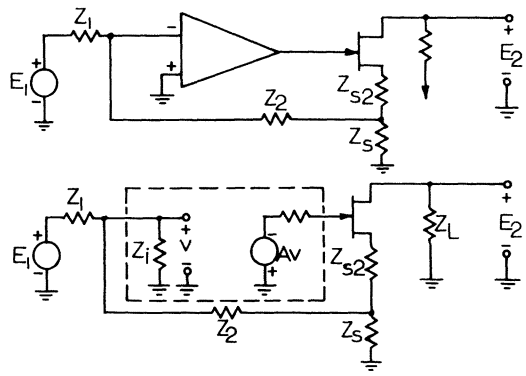

$$Z'_1 = \frac{Z_1 Z_i}{Z_1 + Z_i} \qquad Z'_{s2} = Z_{s2} + \frac{r_{d2} + Z_L}{1 + \mu_2}$$

$$T = \frac{\mu_2}{1 + \mu_2} \cdot \frac{A Z'_1}{Z'_1 + Z_2 + Z'_{s2}\left(1 + \frac{Z'_1 + Z_2}{Z_s}\right)} \qquad K = \frac{Z_L}{Z_1}\left(1 + \frac{Z_2}{Z_s}\right)$$

$$\frac{KT}{G_o} = A \frac{\mu_2}{1 + \mu_2}\left(1 + \frac{Z_2}{Z_s}\right)$$

Figure C6. Shunt-series FET amplifier.

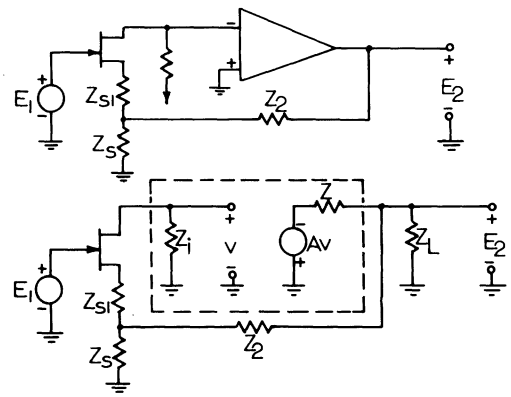

$$Z'_{S1} = Z_{S1} + \frac{r_{d1} + Z_i}{1 + \mu_1} \qquad Z'_L = \frac{Z Z_L}{Z + Z_L}$$

$$T = \frac{Z_L}{Z + Z_L} \cdot \frac{A Z_i}{Z'_L + Z_2 + Z'_{S1}\left(1 + \frac{Z'_L + Z_2}{Z_S}\right)} \qquad K = \frac{\mu_1}{1 + \mu_1}\left(1 + \frac{Z_2}{Z_S}\right)$$

$$\frac{KT}{G_o} = A \frac{Z_i}{Z}\left(1 + \frac{Z_2}{Z_S}\right)$$

Figure C7. Series-shunt FET amplifier.

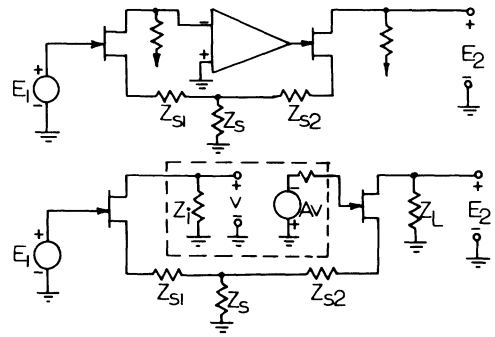

$$Z'_{S1} = Z_{S1} + \frac{r_{d1} + Z_i}{1 + \mu_1} \qquad Z'_{S2} = Z_{S2} + \frac{r_{d2} + Z_2}{1 + \mu_2}$$

$$T = \frac{\mu_2}{1 + \mu_2} \cdot \frac{A Z_i}{Z'_{S1} + Z'_{S2}\left(1 + \frac{Z'_{S1}}{Z_S}\right)} \qquad K = -\frac{\mu_1}{1 + \mu_1} \cdot \frac{Z_L}{Z_S}$$

$$\frac{KT}{G_o} = -A \frac{Z_i}{Z_S} \cdot \frac{\mu_2}{1 + \mu_2}$$

Figure C8. Series-series FET amplifier.

The triangular amplifier is integrated or discrete, so the analysis is sufficiently general to cover a multitude of situations. Since the triangular amplifier may contain either BJT's or FET's, the analysis of amplifiers with mixed active elements is also possible.

ACKNOWLEDGMENT

The author wishes to express his gratitude to Prof. Joseph Frank of Newark College of Engineering, for the many enlightening discussions on the subject of feedback, and to Dr. Jeannette Rosenstark for her valuable criticism of the manuscript.

REFERENCES

1. H. S. Stewart, "Engineering Electronics", Allyn & Bacon, 1969, Chapter 12.
2. C. Belove and D. L. Schilling, "Feedback Made Easy for the Undergraduate", IEEE Trans. on Education, Vol. 12, June 1969, pp. 97–103.
3. P. E. Gray and C. L. Searle, "Electronic Principles, Physics, Models and Circuits", John Wiley, 1967, Ch. 18.
4. R. B. Blackman, "Effect of Feedback on Impedance", BSTJ Vol. 22, October 1943, pp. 269–277.

Short Notes

MECAP—An Analysis Program for Microwave Engineering Courses

JOHN C. FIELD, MEMBER, IEEE, AND DAVID L. HERRICK, STUDENT MEMBER, IEEE

***Abstract*—There exists a need, in undergraduate microwave engineering courses, for a simple analysis program similar to ECAP, but which is applicable to distributed circuits. Such a program has been developed at the University of Maine, Orono to analyze a network of cascaded two-ports with the possibility of one feedback path. This configuration, while not the most general, will encompass nearly all networks encountered in an undergraduate course. It is also fast and very easy to use. Some examples of its use are given. Student response was very favorable and it is concluded that some sort of analysis program should be used in an undergraduate microwave engineering course.**

Manuscript received April 3, 1974.
The authors are with the Department of Electrical Engineering, University of Maine, Orono, Me. 04473.

INTRODUCTION

Most undergraduate microwave engineering courses include impedance matching methods, e.g., stub tuning and quarterwave transformers. However, it is quite tedious to calculate the network's frequency response by hand even when using Smith chart methods. In order to perform these and other calculations many industrial firms have developed analysis programs specifically for microwave networks [1-3]. These programs are usually of two general types. The first type analyzes cascaded two port networks and may or may not allow feedback. The second type is more general in that it will handle multiport networks but it is less efficient when applied to cascaded networks.

An analysis program would then be very useful in a microwave engineering course. It would allow the student to both verify his designs and determine their frequency responses. In addition it would be following the industrial approach. To satisfy this need